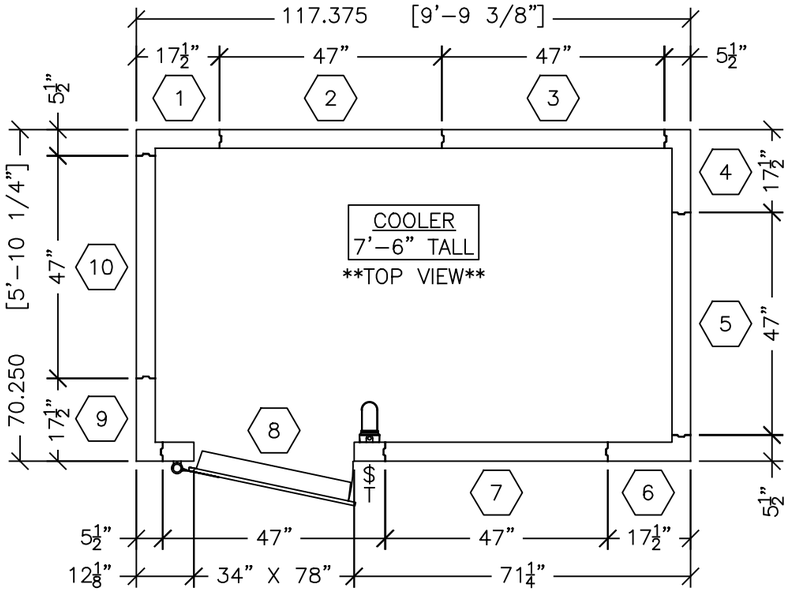

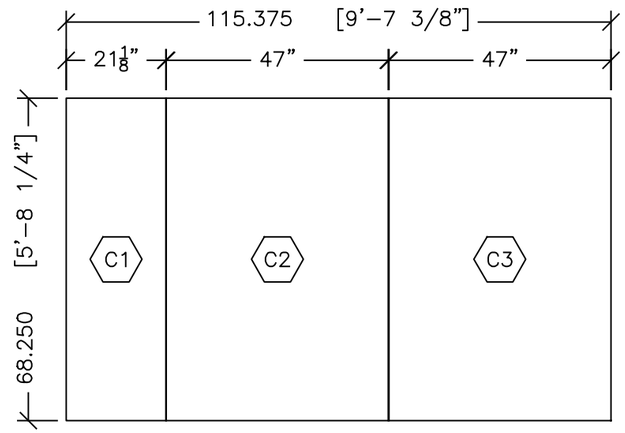

4" LAG CEILING
TOP VIEW

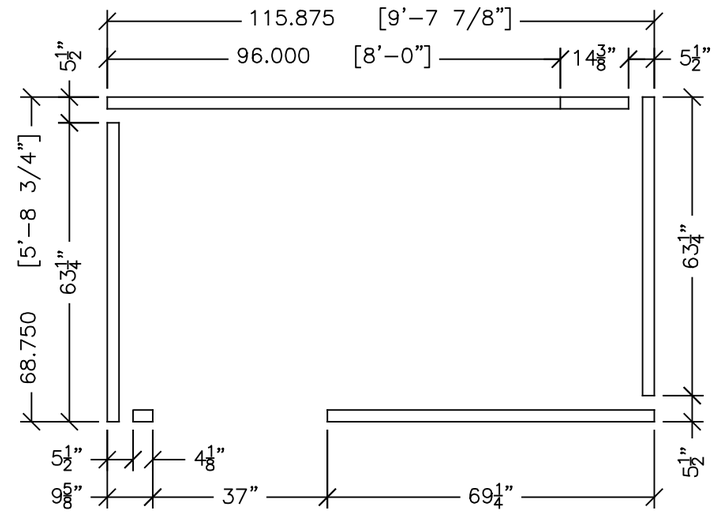

2½" WOOD SCREED
TOP VIEW

COOLER SPECIFICATIONS

CHECKED:

_____ SIZE: 9'–9 3/8" x 5'–10 1/4" x 7'–6"
_____ PANEL THICKNESS: 4" WALLS, & 4" CEILING
_____ EXTERIOR FINISH: (01) 26 GA. STUCCO GALVANIZED
_____ INTERIOR FINISH: (01) 26 GA. STUCCO GALVANIZED
_____ CEILING TYPE: LAG DOWN
_____ SCREED TYPE: WOOD SCREED
_____ DOOR DESCRIPTION: 1 QTY 34" x 78" OVERLAP SELF–CLOSING DOOR 3–SIDED GASKET W/ BOTTOM SWEEP

ACCESSORIES:
_____ (1) VAPOR PROOF LIGHT 115V. (BULB NOT INCLUDED)
_____ (1) LIGHT SWITCH AND DIGITAL THERMOMETER 115V.
_____ (1) COVE MOLDING

NOTES:
_____ DOOR CAN BE INSTALLED WHERE ANY 47" PANEL OCCURS.

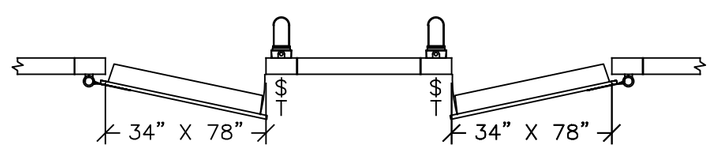

LEFT HAND SWING ☐ RIGHT HAND SWING ☐

NOTE: DOOR CAN BE PLACED WHERE ANY 47" PANEL OCCURS.

*** ATTENTION *** PLEASE SIGN

_____ ("BUYER") APPROVES IN ALL RESPECTS THE DRAWINGS PROVIDED BY CARROLL COOLERS ("SELLER") IN CONNECTION WITH THE SELLER'S QUOTE, CI–_____, DATED _____, 201_ AND/OR THE BUYER'S PURCHASE ORDER, #_____, DATED _____, 201_. THE BUYER ACKNOWLEDGES & CONFIRMS THAT THE AGREEMENT BETWEEN BUYER AND SELLER CONSISTS OF THE (i) DESCRIPTIONS AND QUANTITIES OF THE GOODS STATED ON SUCH PURCHASE ORDER, AND (ii) THE PRICES, DELIVERY DATES, AND TERMS & CONDITIONS STATED ON SUCH QUOTE. BUYER FURTHER ACKNOWLEDGES THAT SUCH TERMS & CONDITIONS SUPERSEDE AND REPLACE ANY AND ALL TERMS AND CONDITIONS APPEARING ON/IN THE BUYER'S PURCHASE ORDER FORM.

*** ATTENTION *** PLEASE SIGN & CHECK BOX

FAX TO CARROLL COOLERS
AT (712) 792–6748

☐ APPROVED AS DRAWN
☐ APPROVED AS NOTED
☐ REVISE AND RESUBMIT

SIGNATURE

PRINTED NAME DATE

IT IS THE CUSTOMER'S RESPONSIBILITY TO VERIFY ALL ITEMS ON THE APPROVAL. ALL NECESSARY REVISIONS MUST BE NOTED ON THIS DRAWING. FINAL DRAWING WILL BE PRODUCED USING A SIGNED APPROVAL DWG.

IMPORTANT!

THIS WALK–IN IS DEIGNED TO SUPPORT ONLY ITS OWN WEIGHT. STORAGE ON TOP, MOUNTING TO, OR MODIFYING THE WALK–IN VOIDS ALL MANUFACTURER'S WARRANTIES. ANY OUTDOOR WALK–IN MUST BE DESIGNED TO MEET STATE & LOCAL SNOW LOAD AND LIVE LOAD REQUIREMENTS.

IMPORTANT!

CARROLL COOLERS MUST KNOW IF YOU ARE USING QUARRY TILE IN THE WALK–IN OR BUTTING UP TO THE WALK–IN. ROUGH OPENINGS FOR PASS THRU DOORS AND CCI DOORS WILL NEED MODIFICATION TO ALLOW THE DOORS TO OPEN AND CLOSE PROPERLY.

CLASSIFIED UL
BUILDING UNITS
SURFACE BURNING CHARACTERISTICS
4P37

	CORE MATERIAL	5½" THICK MAXIMUM PAINTED OR FINISHED STEEL	UNPAINTED PANEL ALUMINUM
FLAME SPREAD	20	20	30
SMOKE DEVELOPED	400	OVER 500	OVER 500

R15578

NOTICE: CONCRETE AND TILE WORKERS

*THE SHEET METAL FACING INSIDE THIS WALK–IN MAY STAIN OR OXIDIZE DUE TO EXCESSIVE MOISTURE CREATED BY HYDRATION OF CONCRETE MATERIALS.

*EXTRA CARE MUST BE TAKEN WHEN USING MURIATIC ACID OR OTHER HARSH CLEANING MATERIALS.

*EXTREMELY IMPORTANT TO VENTILATE THE WALK–IN PROPERLY WHILE CONCRETE IS CURING.

WARNING!

ENGINEERED FOR ON–GRADE INSTALLATION. IF ANY PORTION OR ALL OF THIS WALK–IN IS TO BE INSTALLED IN A DEPRESSION, CONTACT THE CARROLL COOLERS, INC. SALES DEPT. IMMEDIATELY 1–800–764–6834

WALK–IN COMPLIES WITH ALL PROVISIONS OF SECTION 312 OF THE ENERGY INDEPENDENCE AND SECURITY ACT OF 2007

CARROLL COOLERS
19705 HIGHWAY 30 WEST; P.O. BOX 671
CARROLL, IOWA 51401
PHONE (800) 764–6834
FAX (712) 792–6748
Carroll Coolers CCI

SALESMAN	.
APPROVAL DRAWING DATE	5/31/16
PRODUCTION DRAWING DATE	6/13/16
TAG NUMBER/FILE NAME	6 x 10 x 7–6 CLR
APRV DWG BY	.
JOB LOCATION	.
PROD DWG BY	.
PURCHASE ORDER NUMBER	.