Barr Inc.

1423 Planeview Drive
Oshkosh, WI 54904
920-231-1711 Phone

20’ x 30’ x 8’-4”

Drive-In Cooler

DRAWING INDEX

T.1	TITLE SHEET
A100	FLOOR/CEILING PLAN
A200	INSULATED WALL PANEL ELEVATIONS
A300	INSULATED WALL PANEL DETAILS

REVISION	BY	DATE

Barr Inc.
1423 Planeview Drive
Oshkosh, WI 54904
920-231-1711 Phone

20’ x 30’ x 8’-4”
Drive-In Cooler

TOLERANCES UNLESS SPECIFIED
FRACTIONAL X/X ± 1/32" DECIMAL .XX ± .015 .XXX ± .005 .XXXX ± .001 ANGLE X° ± 0°30' X°XX' ± 0°05'

Draftsmen is not responsible for panel heights, quantities and / or dimensions. Contractor to verify all information.

TITLE

DR.BY: KRZ
DATE: 8/30/2016
SCALE: NTS
CHECKED BY:
SHEET NO.
T.1

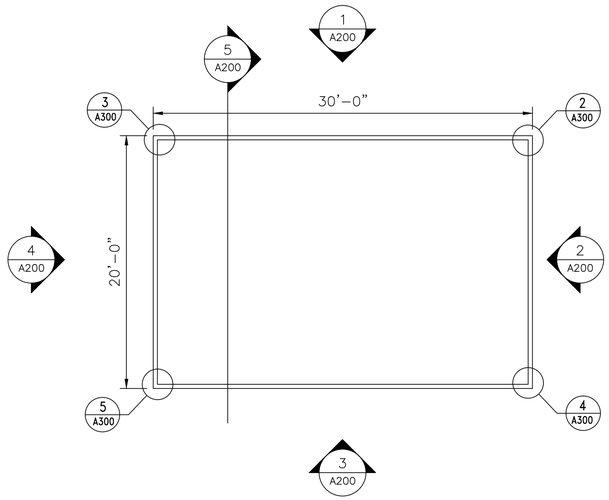

1 A100 FLOOR PLAN

SCALE: N.T.S.

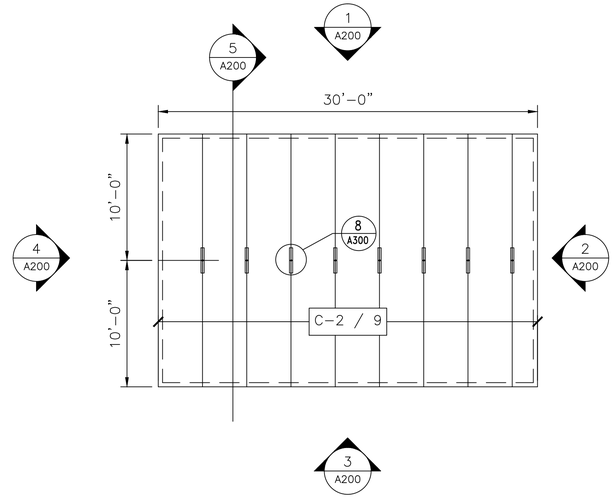

2 A100 CEILING PLAN

SCALE: N.T.S.

PANEL SCHEDULE

PANEL DESIG.	PANEL HEIGHT	QTY OF PANELS	PANEL THICK	PANEL SERIES	PANEL COLOR
W–1	8'–0"	30	4"	MESALINE	USDA WHITE
C–2	20'–0"	9	4"	MESALINE	USDA WHITE

REVISION	BY	DATE

Barr Inc.
1423 Planeview Drive
Oshkosh, WI 54904
920-231-1711 Phone

20' x 30' x 8'-4"
Drive-In Cooler

TOLERANCES UNLESS SPECIFIED
FRACTIONAL X/X ± 1/32" XX ± .015 X° ANGLE ± 0°30'
DECIMAL .XXX ± .005 X°XX' ± 0°05'
.XXXX ± .001

Draftsmen is not responsible for panel heights, quantities and / or dimensions. Contractor to verify all information.

FLOOR PLAN

DR.BY: KRZ

DATE: 8/30/2016

SCALE: NTS

CHECKED BY:

SHEET NO.
A100

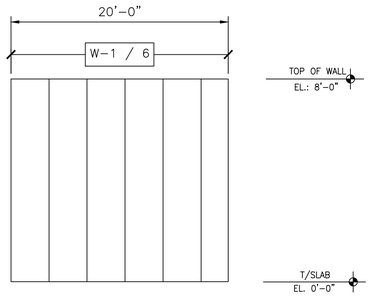

1 A200 WALL ELEVATION
SCALE: N.T.S.

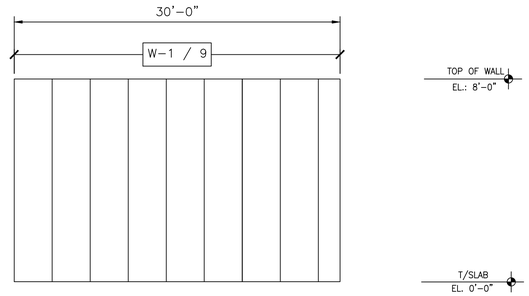

2 A200 WALL ELEVATION
SCALE: N.T.S.

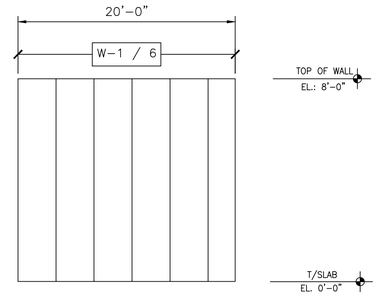

3 A200 WALL ELEVATION
SCALE: N.T.S.

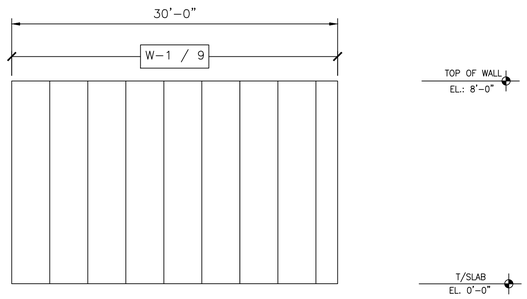

4 A200 WALL ELEVATION
SCALE: N.T.S.

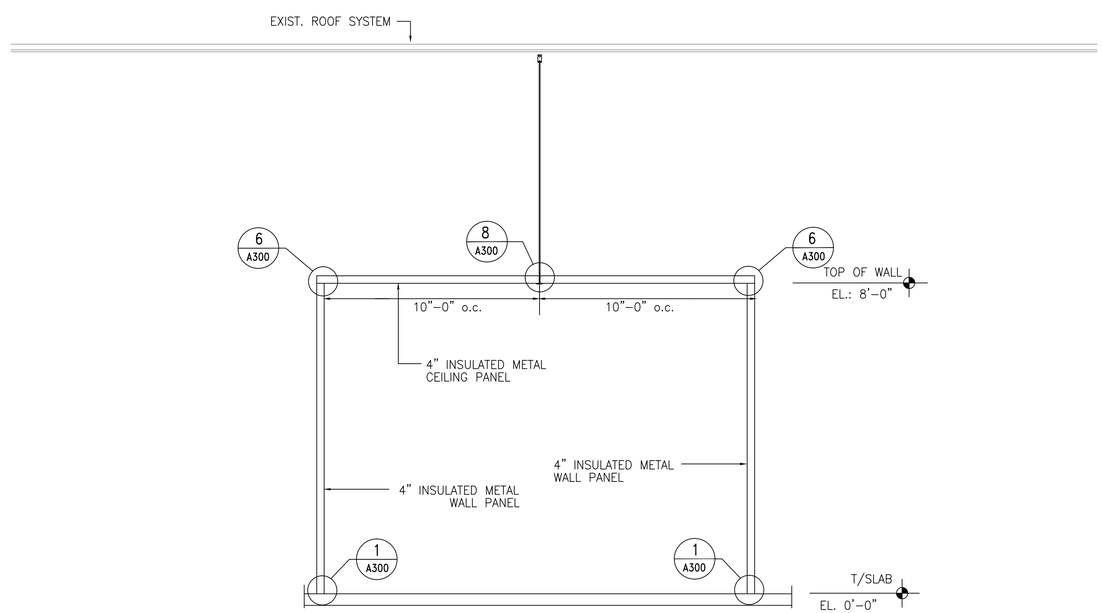

5 A200 WALL SECTION
SCALE: N.T.S.

PANEL SCHEDULE

PANEL DESIG.	PANEL HEIGHT	QTY OF PANELS	PANEL THICK	PANEL SERIES	PANEL COLOR
W-1	8'-0"	30	4"	MESALINE	USDA WHITE
C-2	20'-0"	9	4"	MESALINE	USDA WHITE

REVISION	BY	DATE

Barr Inc.
1423 Planeview Drive
Oshkosh, WI 54904
920-231-1711 Phone

20' x 30' x 8'-4"
Drive-In Cooler

TOLERANCES UNLESS SPECIFIED
FRACTIONAL ± 1/32" X/X
DECIMAL .XX ± .015 .XXX ± .005 .XXXX ± .001
ANGLE X° ± 0°30' X°XX' ± 0°05'

Draftsmen is not responsible for panel heights, quantities and / or dimensions. Contractor to verify all information.

WALL ELEVATIONS

DR.BY: KRZ
DATE: 8/30/2016
SCALE: NTS
CHECKED BY:
SHEET NO.
A200

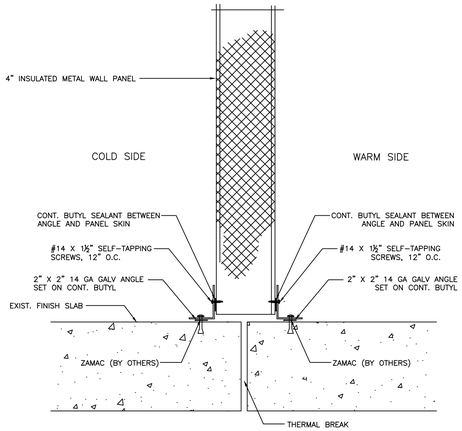

1 A300 BASE DETAIL

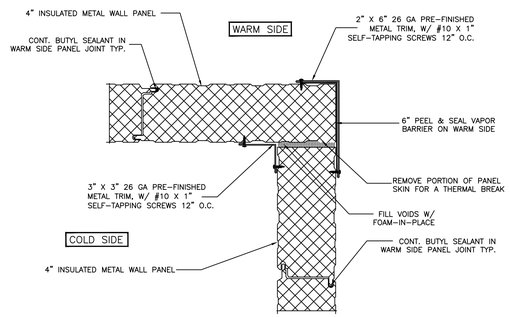

2 A300 CORNER DETAIL

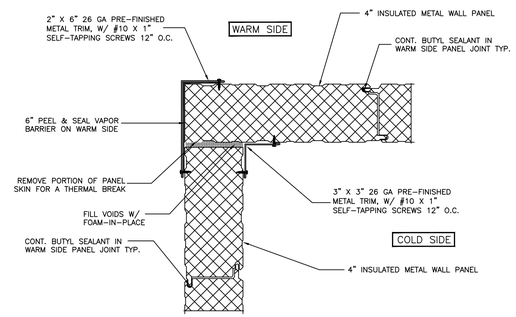

3 A300 CORNER DETAIL

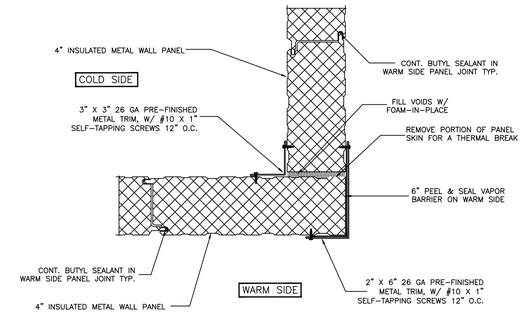

4 A300 CORNER DETAIL

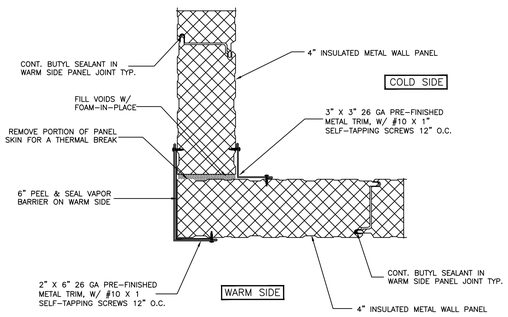

5 A300 CORNER DETAIL

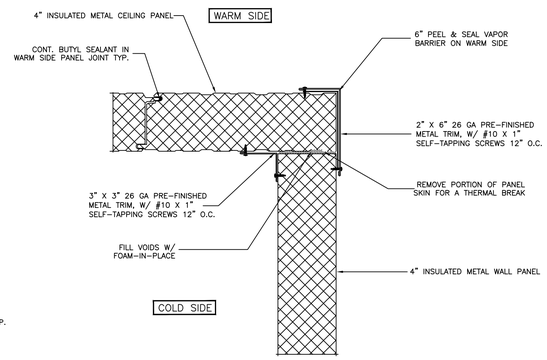

6 A300 WALL / CEILING DETAIL

7 A300 NOT USED

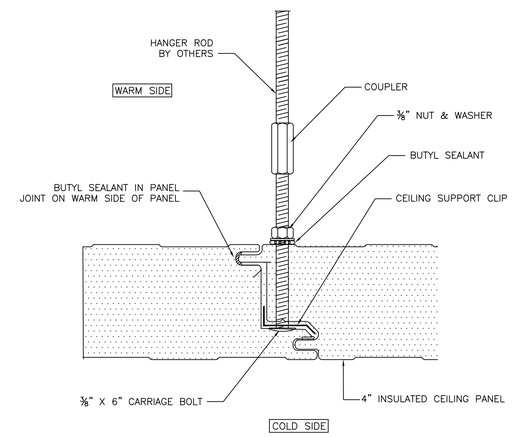

8 A300 INTERMEDIATE CEILING SUPPORT

DATE	BY	REVISION

Barr Inc.
1423 Planeview Drive
Oshkosh, WI 54904
920-231-1711 Phone

20' x 30' x 8'-4"
Drive-In Cooler

TOLERANCES UNLESS SPECIFIED
FRACTIONAL ± 1/32" DECIMAL .XX ± .015 ANGLE ± 0°30'
X/X" ± 1/32" .XXX ± .005 X°XX' ± 0°05'
.XXXX ± .001

Draftsmen is not responsible for panel heights, quantities and / or dimensions. Contractor to verify all information.

WALL DETAILS

DR.BY: KRZ
DATE: 8/30/2016
SCALE: NTS
CHECKED BY:
SHEET NO.
A300